Comp side
Solder side – 4636 05-224-7002-5 c
Date coded – 22/73

RevNo	Revision note	Date	By	Checked
–	–	–	–	–

62pin PCB Plug

K(Ms)	PL2-A1	K(MS)
MDS	PL2-A2	MDS
$\overline{Z8L}$	PL2-A3	$\overline{Z8L}$
Z8S	PL2-A4	Z8S
Z8L	PL2-A5	Z8L
S4S	PL2-A6	S4S
S4L	PL2-A7	S4L
$\overline{S4L}$	PL2-A8	$\overline{S4L}$
KEYPRESS	PL2-A9	N/c
$\overline{S4S}$	PL2-A10	$\overline{S4S}$
F5	PL2-A11	F5
Z4	PL2-A12	Z4
$\overline{F4}$	PL2-A13	$\overline{F4}$
F4	PL2-A14	F4
READ	PL2-A15	READ
(Usp) –13.5V	PL2-A16	–13.5V
(Usp) –13.5V	PL2-A17	–13.5V
Z8	PL2-A18	Z8
ZMD	PL2-A19	ZMD
(Usp) –13.5V	PL2-A20	–13.5V
ZAC3	PL2-A21	ZAC3
ZAC0	PL2-A22	ZAC0
ZAC1	PL2-A23	ZAC1
WRITE	PL2-A24	WRITE
ZMR	PL2-A25	ZMR
ZAC2	PL2-A26	ZAC2
$\overline{F5}$	PL2-A27	$\overline{F5}$
N/c	PL2-A28	N/c
$\overline{Z8}$	PL2-A29	$\overline{Z8}$
$\overline{Z4}$	PL2-A30	$\overline{Z4}$
AC	PL2-A31	AC
ACO	PL2-B1	ACO
MRS	PL2-B2	MRS
N/c	PL2-B3	N/c
N/c	PL2-B4	N/c
S1	PL2-B5	S1
COM2	PL2-B6	COM2
COM2	PL2-B7	COM2
COM2	PL2-B8	COM2
$\overline{Z8S}$	PL2-B9	$\overline{Z8S}$
SS3	PL2-B10	SS3
$\overline{T}$	PL2-B11	$\overline{T}$
T	PL2-B12	T
N/c	PL2-B13	2GR36-VE
BL8	PL2-B14	BL8
BL1	PL2-B15	BL1
SS2	PL2-B16	SS2
N/c	PL2-B17	N/c
SS4	PL2-B18	SS4
SS1	PL2-B19	SS1
N/c	PL2-B20	N/c
N/c	PL2-B21	N/c
C8	PL2-B22	C8
Z1	PL2-B23	Z1
N/c	PL2-B24	N/c
C1	PL2-B25	C1
Z2	PL2-B26	Z2
$\overline{Z1}$	PL2-B27	$\overline{Z1}$
$\overline{Z2}$	PL2-B28	$\overline{Z2}$
0V	PL2-B29	0V
+12V(+Up)	PL2-B30	+12V
–12V(–Un)	PL2-B31	–12V

BOARD-2 [6]

These diagrams are referenced to 0V – Logical 1 = +12v, logical 0 = 0v
Signal names are from German logic diagrams which reference +12V – Logical 1 = 0V, 0 = +12V

© 2008 Mike Hatch. (www.soemtron.org)

DM Associates
33, Northbrook Road
Aldershot, Hampshire. GU11 3HE
Email: mike@soemtron.org
www.soemtron.org

Pcb Dwg # =			Scale	Nts
	Name	Date	Sheet	5
Drawn	MD Hatch	12/5/2008	Next Sheet	6
Checked	–	–	Drawing Number	Soemtron 220 A2 Issue A

Title: Soemtron ETR 220 Calculator
Core Drivers
BOARD 2

Solder side – 05-224-7002-5c

RevNo	Revision note	Date	By	Checked
–	–	–	–	–

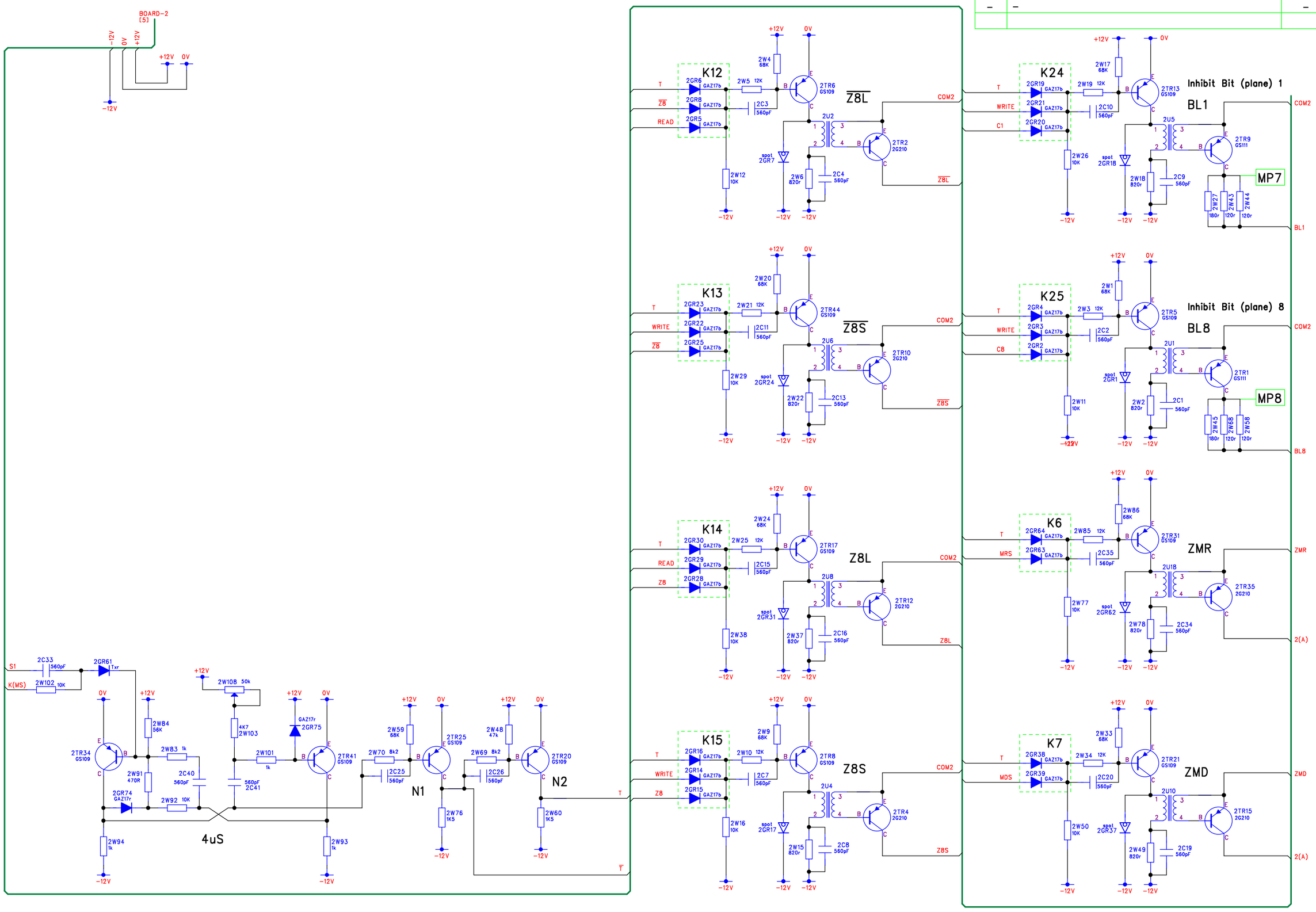

These diagrams are referenced to 0V – Logical 1 = –12v, logical 0 = 0V

© 2008 Mike Hatch. (www.soemtron.org)

DM Associates
33, Northbrook Road
Aldershot, Hampshire. GU11 3HE
Email: mike@soemtron.org
www.soemtron.org

Pcb Dwg # =			Scale	Nts
	Name	Date	Sheet	6
Drawn	MD Hatch	12/5/2008	Next Sheet	7
Checked	–	–	Drawing Number	

Title: Soemtron ETR 220 Calculator
Core Drivers
BOARD 2 Sheet 2

Soemtron 220 A2 Issue A